Digimatic Micrometer Heads

SERIES 164

FEATURES

- The Digimatic Micrometer Heads...
- The display can be rotated up to 330˚ for easy reading in any position.

164-164

SPECIFICATIONS

Metric

Range	Order No.	Accuracy	Mass (g)
0 - 50mm	**164-163**	±3µm	490

Inch/Metric

Range	Order No.	Accuracy	Mass (g)
0 - 2" / 0 - 50.8mm	**164-164**	±.00015"	490

DIMENSIONS

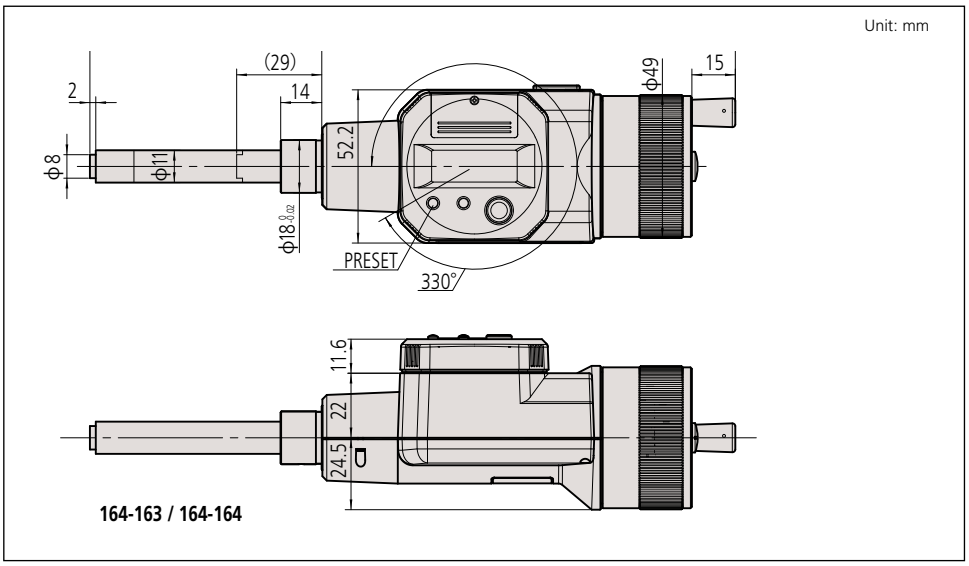

164-163 / 164-164

Technical Data

Accuracy: Refer to the list of specifications.

Resolution: 0.001mm or .00005"/0.001mm
Display: LCD
Battery: SR44 (2 pcs.), **938882**
Battery life: 1.8 years:

Function

Zero-setting, Data hold, Data output, Preset, inch/mm conversion (on inch/metric models only)
Alarm: Low voltage, Counting value composition error

Optional Accessories

959149: SPC cable (1m / 40")
959150: SPC cable (2m / 80")

Find Quality Products Online at: www.GlobalTestSupply.com sales@GlobalTestSupply.com